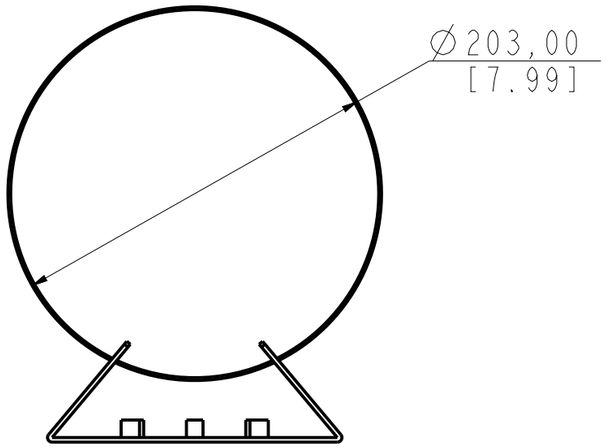

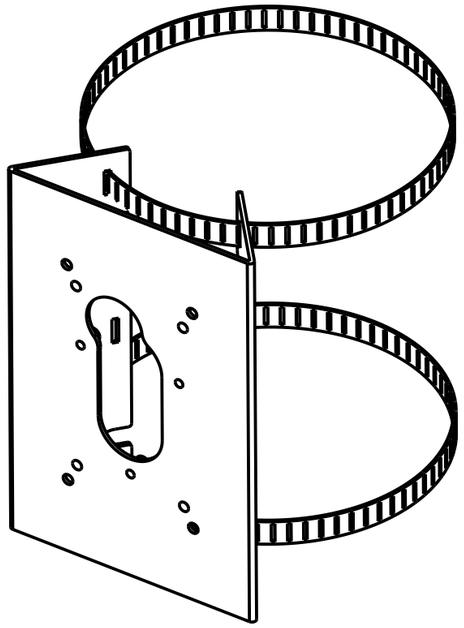

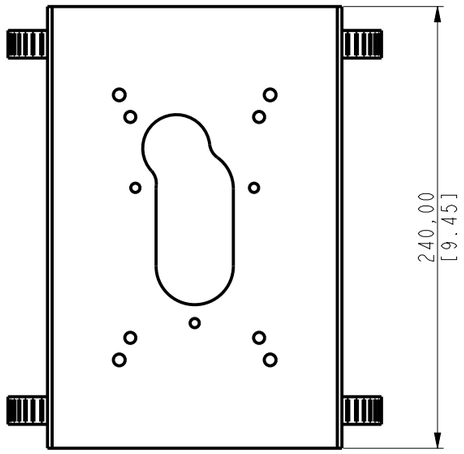

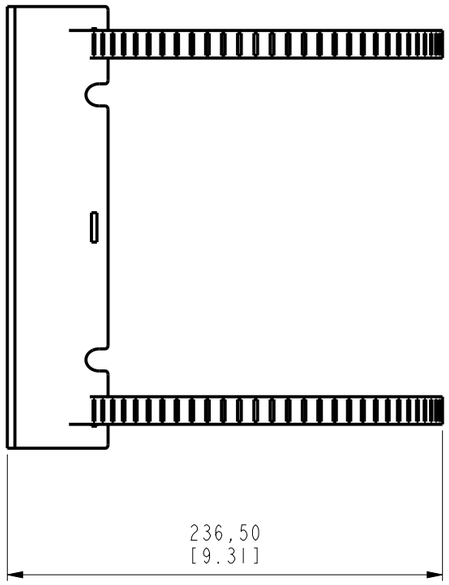

NOTES:
1.Part No: PMAX-0503-000R0
2.Description: POLE MOUNT KIT WHITE
3.Material: AL & stainless
4.Color: White
5.Drawing scale: 0.3
6.Accessary:

item	part name	quantity	note
1	M6x10	4	Accessary
2	M5x14	3	Accessary