Instruction Guide

Professional CCTV Camera

SUNELL

Effio-E Range
OSD Menu

Models:

Box Camera	PAGE 1-4
Vandal Dome	PAGE 5-8
Internal Dome	PAGE 9-12
IR Bullets	PAGE 13-22
IR Vandal	PAGE 23-24
OSD Guide	PAGE 25+

CE FC RoHS compliant

Features

- Effio-E Enhanced
- Privacy Masking
- Motion Detection
- Advance BLC
- Anti-Colour Rolling
- Front IR Compensation

Revision v1.4

Identification

Mechanical Drawing

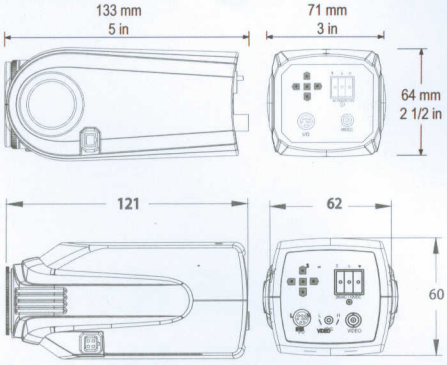

I/O Connector

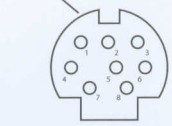

Accessories

(a) Auto Iris connector

(b) Adapter-ring

DC IRIS

Figure: Auto iris connector Jack

Pin	Video iris lens	DC iris lens
1	Power	Damp-
2	Null	Damp+
3	Video signal	Drive+
4	Ground	Drive-

Rear I / O Interface.

1) Black RS-485+ (Effio-P & Effio-S)
2) Brown RS-485- (Effio-P & Effio-S)
3) Orange NC
4) Blue D / N_OUT night status signal output (color: H; black & white: L)
5) Green ALARM_OUT alarm output (motion: L; no motion: H)
6) Yellow GND to
7) White EXT_IN external trigger input (L / NC: Day mode; H: Night mode)
8) Red POWER 3.3V DC
   Note: H = 3.3V; L = GND

NOTE: Make sure you don't have any missing parts before you make the installation. Incorrect installation could void the warranty if instructions are not followed correctly. Please call technical for assistance if you are unsure about any procedures.

Installation

Installation information (General overview)

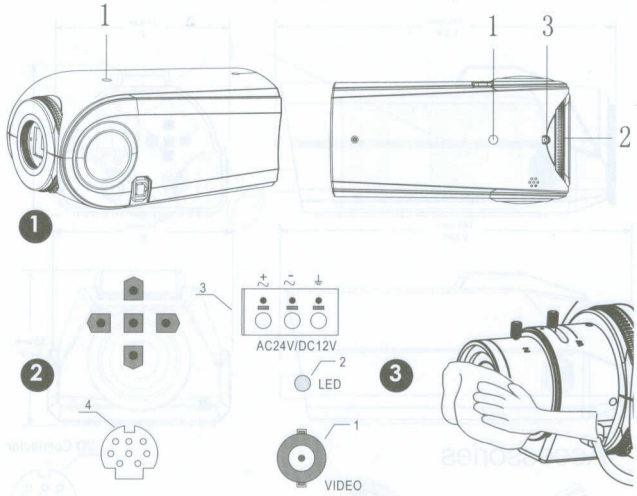

1 Box Camera require only a few steps for installation:

The position (1) shows the 1/4 20UNC bracket fitting location one top or rear this allows you to install in different fitting locations as your bracket dictates.

(2) This is your back focus adjustment on the lens. When you install your lens you are able to adjust back focus as different lens tend require such steps.

(3) This is the locking screw to keep the back focus position locked into place.

2 (1) Connect your video camera to the BNC connector here.

(3) Connect the 12v DC Power source or AC 24V (optional model) to terminals:

a. positive (+) wire for DC, any supply wire for AC.
b: negative (-) wire for DC, other supply wire for AC.

3 With all good installations clean lens just to make sure when installed you have not accidentally put a smear or mark which might effect the picture.

Identification

Mechanical Drawing

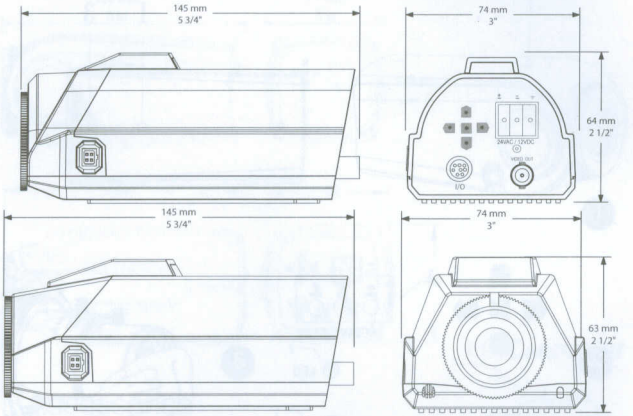

Accessories

(a) Auto Iris connector (b) Adapter-ring

DC IRIS

Figure: Auto iris connector Jack

Pin	Video iris lens	DC iris lens
1	Power	Damp-
2	Null	Damp+
3	Video signal	Drive+
4	Ground	Drive-

I/O Connector

Rear I / O Interface.

1) Black RS-485+ (Effio-P & Effio-S)
2) Brown RS-485- (Effio-P & Effio-S)
3) Orange NC
4) Blue D / N_OUT night status signal output (color: H; black & white: L)
5) Green ALARM_OUT alarm output (motion: L; no motion: H)
6) Yellow GND to
7) White EXT_IN external trigger input (L / NC: Day mode; H: Night mode)
8) Red POWER 3.3V DC
   Note: H = 3.3V; L = GND

NOTE: Make sure you don't have any missing parts before you make the installation. Incorrect installation could void the warranty if instructions are not followed correctly. Please call technical for assistance if you are unsure about any procedures.

Installation

Installation information (General overview)

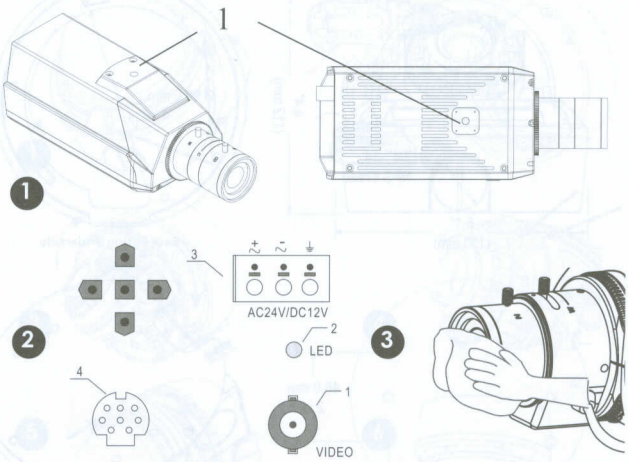

1 Box Camera require only a few steps for installation:

The position (1) shows the 1/4 20UNC bracket fitting location one top or rear this allows you to install in different fitting locations as your bracket dictates.

2 (1) Connect your video camera to the BNC connector here.

(3) Connect the 12v DC Power source or AC 24V (optional model) to terminals:

a. positive (+) wire for DC, any supply wire for AC.
b: negative (-) wire for DC, other supply wire for AC.

3 With all good installations clean lens just to make sure when installed you have not accidentally put a smear or mark which might effect the picture.

Identification

Mechanical Drawing

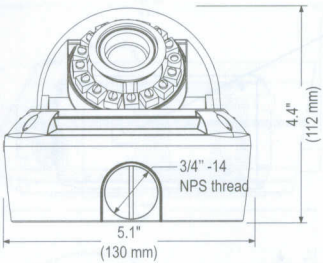

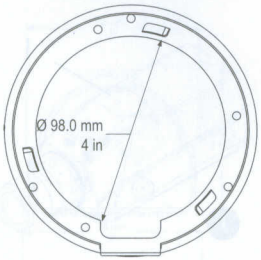

Base Fitting Underside

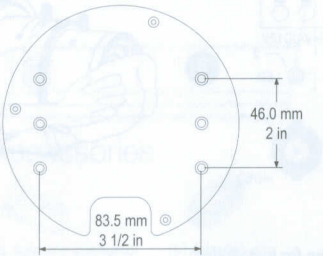

4S Mounting Plate

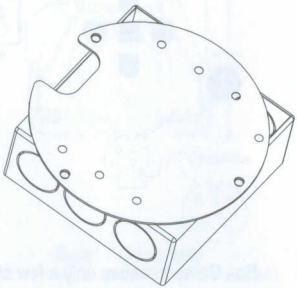

4S Junction Box Fitting

Accessories

(*A*) Wall Plugs
S8 x 30mm 4pc

(*B*) Fitting Screws
PA4 x 35mm 4pc

NOTE: Make sure you don't have any missing parts before you make the installation. Incorrect installation could void the warranty if instructions are not followed correctly. Please call technical for assistance if you are unsure about any procedures.

Installation

Installation information (General overview)

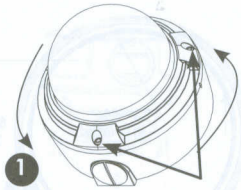

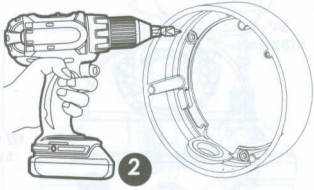

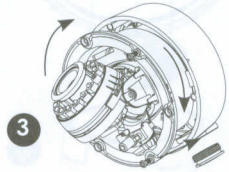

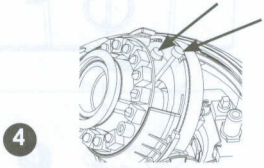

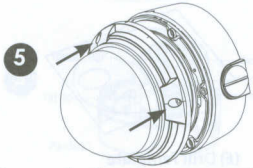

1 Unscrew the thee tamper screws to release the dome cover.
Now turn dome anti-clockwise will release base, from locking lungs.

2 Using the base as a drilled template. pre-drill all requires holes.
Fit the optional base place (A) if required to use a 4S Junction Box

3 Fitting back internal part is twist lock into place, use conduit for power if required.

4 Move camera module, and use Levels to adjust zoom/focus, twist to lock into place.

5 Reifit dome cover and screw back the three tampers, this locks dome water tight.

6 Give cover a wipe clean just to remove smudges from the dome cover.

Check IR LEDs are working by covering the photocell of camera with your thumb your thumb, the IR LEDs will give a faint red glow. (not all models have IR LEDs)

(Don't look at IR LEDs for long periods of time, as you could damage your eyes)

Identification

Mechanical Drawing

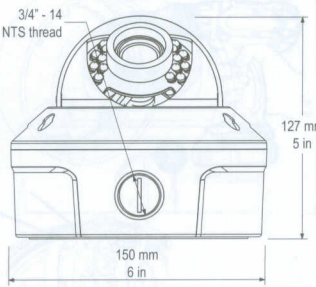

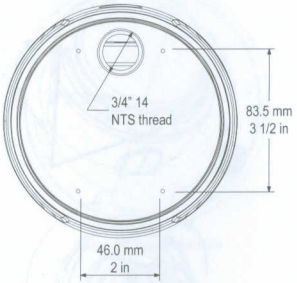

Accessories

(*A*) Wall Plugs
5.6 x 29mm

(*B*) Fitting Screws
PA4 x 30mm

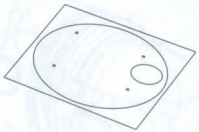

(*E*) Drill Template
130mm White adhesive

(*C*) Opening Tool
50 x 1.8mm

(*D*) L-Wrench
T15 Size

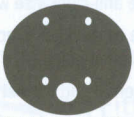

(*F*) Waterproof Pad
128 x 2.5mm black EVA

NOTE: Make sure you don't have any missing parts before you make the installation. Incorrect installation could void the warranty if instructions are not followed correctly. Please call technical for assistance if you are unsure about any procedures.

Installation

Installation information (General overview)

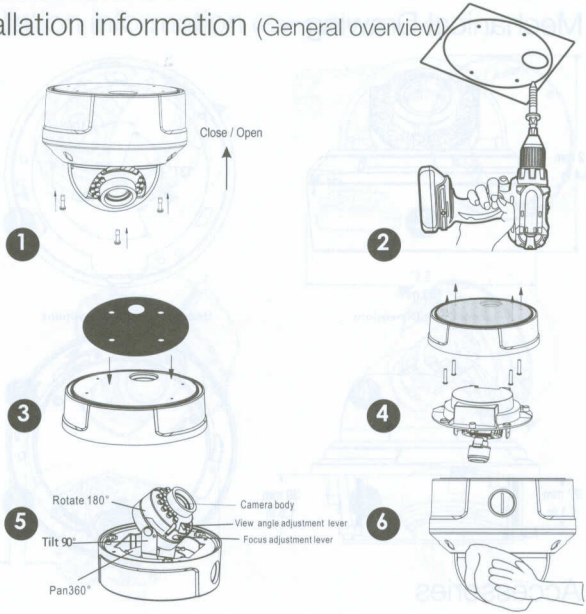

1 Remove the dome and camera cover using the supplied L-Wrench (D)

2 Using the base as a drilled template. pre-drill all requires holes.

3 Fit the Waterproof Pad (F) to the base, with sticky side against camera.

4 Now refit back camera, be careful of cable so not to cut or snag.

5 Adjust position and Focus & zoom, replace cover using L-Wrench

6 Carefully clean the dome surface with a soft lint free cloth.

7 Check IR LEDs are working by covering the photocell of camera with your thumb, the IR LEDs will give a faint red glow.

(Don't look at IR LEDs for long periods of time, as you could damage your eyes)

Identification

Mechanical Drawing

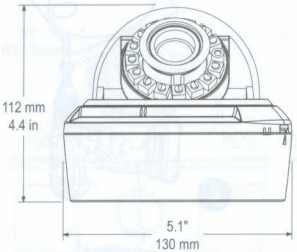

Indoor Dome Dimensions

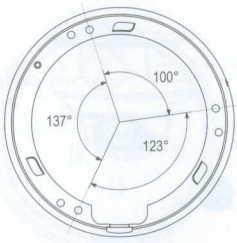

Underside Base hole positions

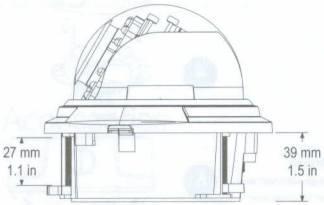

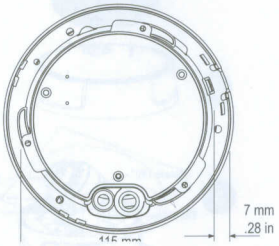

Accessories

(A) Wall Plugs
S8 x 30mm 4pc

(B) Fitting Screws
PA4 x 35mm 4pc

NOTE: Make sure you don't have any missing parts before you make the installation. Incorrect installation could void the warranty if instructions are not followed correctly. Please call technical for assistance if you are unsure about any procedures.

Installation

Installation information (General overview)

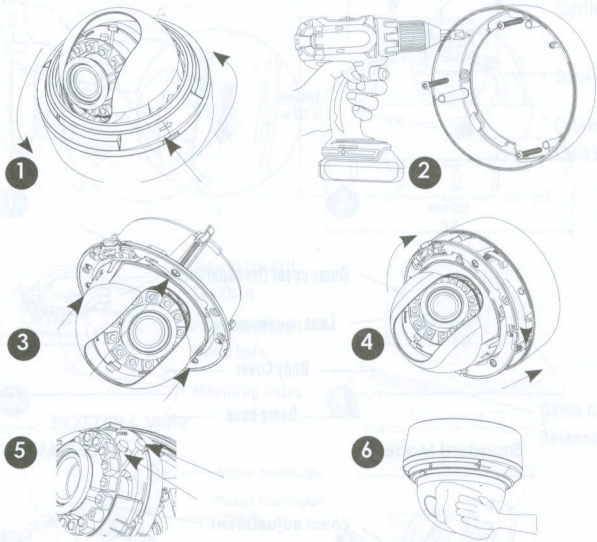

1 Press plastic clip which when pressed you can unlock and lift off the cover. Now turn dome anti-clockwise will release base, from locking lungs.

2 (a) Using the base as a drilled template. pre-drill all requires holes.

3 (b) Using recess mount, use screwdriver will lock lungs into place and also adjust. Dimensions of hole must be within specifications as show on Mechanical Drawing

4 Refit is matter of put dome into recess and turn clockwise to lock into place.

5 Use Levels to adjust zoom/focus, replace black cover, clip shut the dome cover.

6 Check IR LEDs are working by covering the photocell of camera with your thumb your thumb, the IR LEDs will give a faint red glow. (not all models have IR LEDs)

(Don't look at IR LEDs for long periods of time, as you could damage your eyes)

Identification

Mechanical Drawing

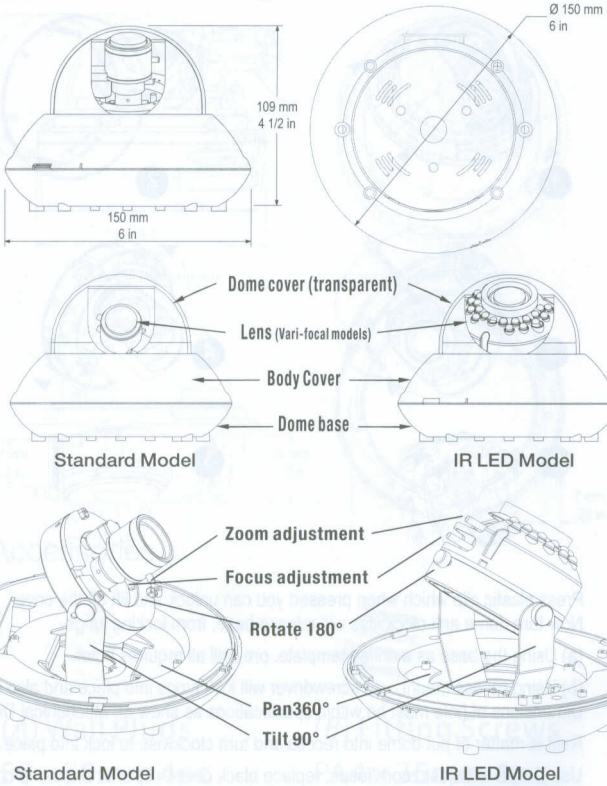

NOTE: Make sure you don't have any missing parts before you make the installation. Incorrect installation could void the warranty if instructions are not followed correctly. Please call technical for assistance if you are unsure about any procedures.

Installation

Installation information (General overview)

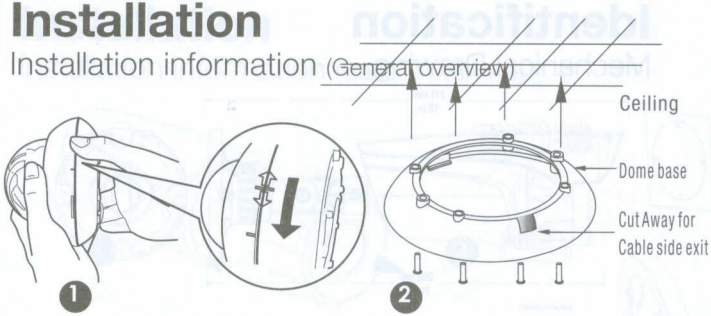

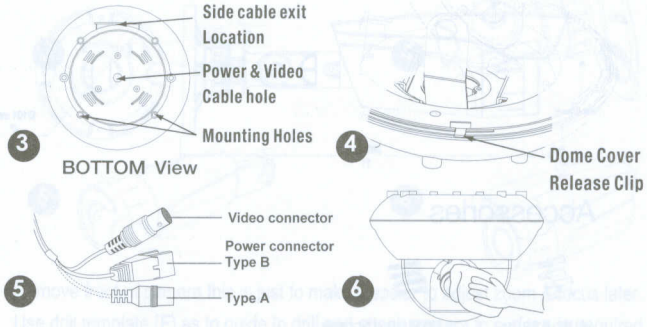

1 Remove the base holding dome as shown, turn right towards you. Align up the arrows, the dome will make a click sound and will open.

2 Using the base as a drilled template. If recess fitting then can be ignored.

3 Fitting the cable out side of the dome you need to re-route the cable. Remove the side cable exit screws, and back feed the cable.

4 Remove dome cover to adjust position and Focus & zoom, locate the Clip and lift gently. Cover is on a rubber cable so won't fall on the floor.

5 Attach power and video. Make sure power + and - are correct.

6 Carefully clean the camera with a soft lint free cloth.

7 With the IR LEDs model cover the photocell of camera with your thumb. This checks the IR LEDs give off a faint red glow.

Identification

Mechanical Drawing

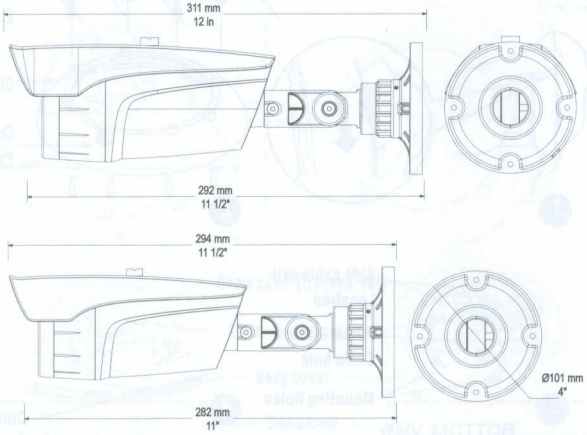

Accessories

(A) Wall Plugs
S8 x 30mm 4pcs

(B) Fitting Screws
PA4 x 35mm 4pcs

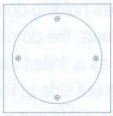

(F) Drill Hole template
(Junction box holes also)

(C) Sunshield Screw
M3 x5mm

(D) L-Hex tool
47x17mm

NOTE: Make sure you don't have any missing parts before you make the installation. Incorrect installation could void the warranty if instructions are not followed correctly. Please call technical for assistance if you are unsure about any procedures.

Installation

Installation information (General overview)

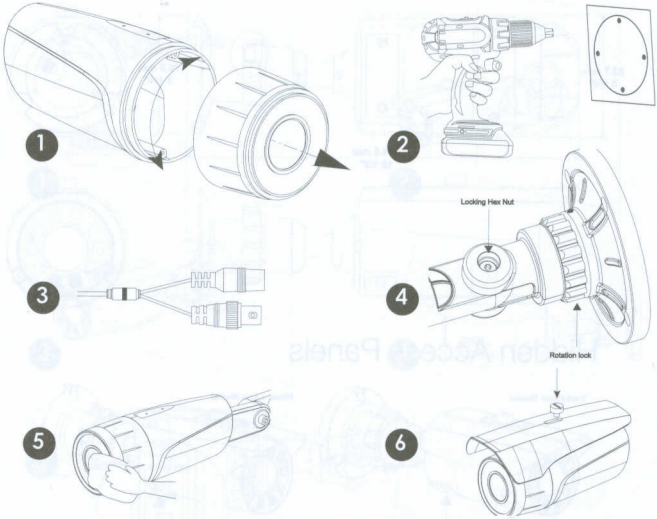

1 Remove front of camera this is just to make it easier to adjust zoom & focus later.

2 Use drill template (F) as to guide to drill and attach camera to surface as required. If you have optional junction box (E), be sure to mark the correct hole positions.

3 With camera attached you can now connect power, adjust focus/zoom. Junction box option cable will connect inside.

4 Usng the (D) L-Hex tool you position left-right up/down and lock into place.

5 Adjust zoom-focus to suite, re-attach front section as removed in step 1. And clean surface with a soft lint free cloth.

6 Now put the sunvisor on using the (C) nut provided in the accessories. Check IR LEDs are working by covering the photocell of camera with your thumb, the IR LEDs will give a faint red glow.

(Don't look at IR LEDs for long periods of time, as you could damage your eyes)

Identification

Mechanical Drawing

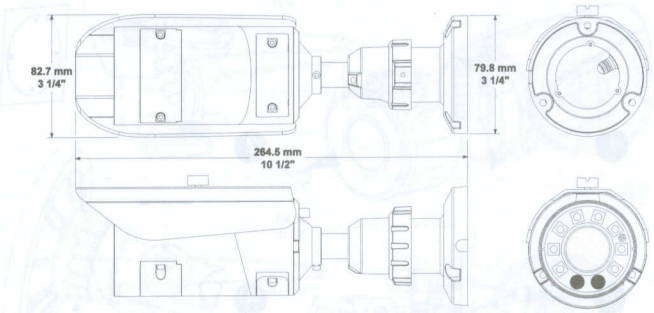

Hidden Access Panels

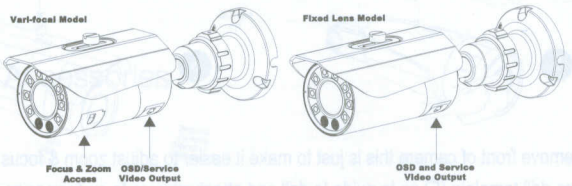

Accessories

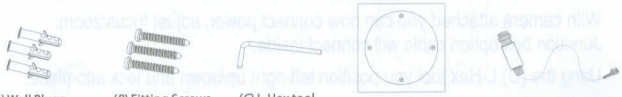

(A) Wall Plugs S8 x 30mm 3pcs

(B) Fitting Screws PA4 x 35mm 3pcs

(C) L-Hex tool 47x17mm

(D) Drill Hole template

(E) Service Video Cable

NOTE: Make sure you don't have any missing parts before you make the installation. Incorrect installation could void the warranty if instructions are not followed correctly. Please call technical for assistance if you are unsure about any procedures.

Installation

Installation information (General overview)

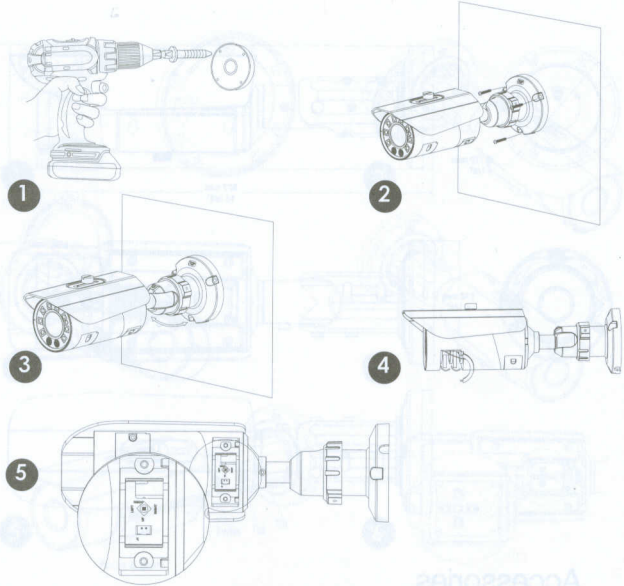

1a Install Wall plugs ***(A)*** if surface requires using bracket as template guide.

1b Alternative method using supplied Drill hole template ***(D)*** *as guide*

2 Attach Camera to surface using screws ***(B)***, note camera top position is marked.

3 Now adjust rear bracket gimble lossen and lock using the Hex tool ***(C)***.

4 Adjust Focus/Zoom from panel, remove using Hex tool ***(C)***. Position adjust & lock.

5 OSD and service connnection panel at rear, Serice cable ***(E)*** connects to BNC.

6 Last Check is for the IR LEDs working by covering the photocell of camera with your thumb, the IR LEDs will give a faint red glow.

(Don't look at IR LEDs for long periods of time, as you could damage your eyes)

Identification

Mechanical Drawing

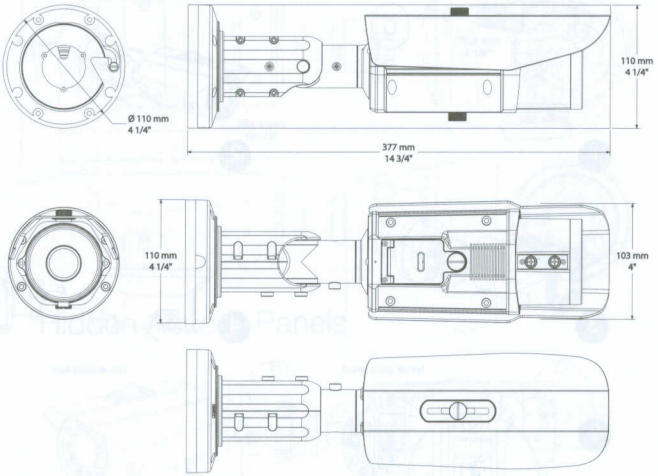

Accessories

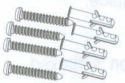

(A) Wall Plugs & Screws 4pcs

(B) Base Locking Screws 4pcs

(C) L-Hex tool 47x17mm

(D) Drill Hole template

(E) Fitting Plate

NOTE: Make sure you don't have any missing parts before you make the installation. Incorrect installation could void the warranty if instructions are not followed correctly. Please call technical for assistance if you are unsure about any procedures.

Installation

Installation information (General overview)

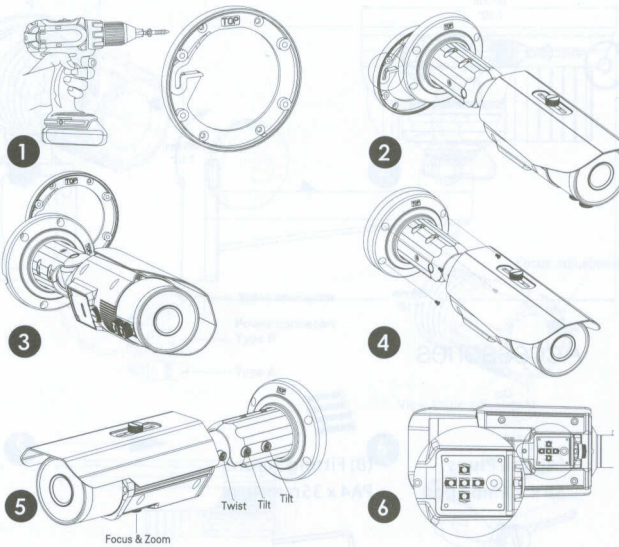

1 Install Fitting plate ***(E)*** the TOP position is marked. Use drill template ***(D)*** for holes.

2 Attach Camera to plate *(E)* with the lock / groove part of camera & base.

3 Camera now will hang and swing freely on plate to allow cable marrying

4 When ready lock camera position to plate using Lock Screws ***(B)***.

5 Adjust position and angle using Hex Tool ***(C)*** to adjust and tighten the nuts.
Now adjust focus / zoom use cross over or flate blade screwdriver (not supplied).

6 OSD control and service (RCA connector) onnnection panel at rear camera.

Last Check is for the IR LEDs working by covering the photocell of camera with your thumb, the IR LEDs will give a faint red glow.

(Don't look at IR LEDs for long periods of time, as you could damage your eyes)

Identification

Mechanical Drawing

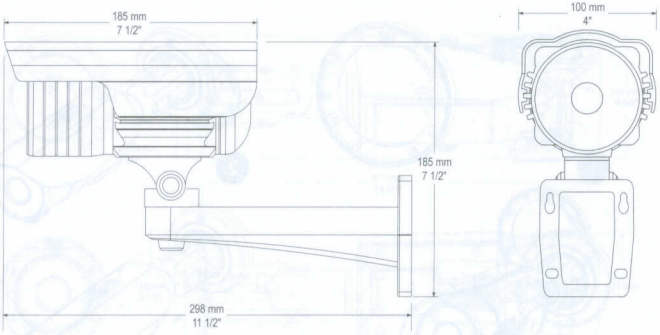

Accessories

(*A*) Wall Plugs
S8 x 30mm 4pcs

(*B*) Fitting Screws
PA4 x 35mm 4pcs

(*C*) Sunshield Screw
M5 Thread

(*D*) Allen Key
47x17mm

NOTE: Make sure you don't have any missing parts before you make the installation. Incorrect installation could void the warranty if instructions are not followed correctly. Please call technical for assistance if you are unsure about any procedures.

Installation

Installation information (General overview)

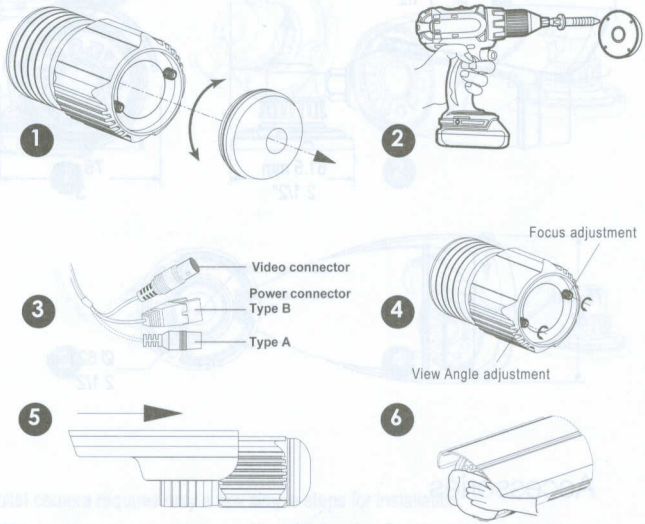

1 Remove the rear part of camera this is just to make it easier to adjust later.

2 Line up camera to surface to drill, using bracket holes with pencil mark to guide you

3 With camera attached you can now power connect. use type as fitted.

4 Adjust zoom focus and position of camera to requirements. re-attach rear tightly.

5 Now slide the sunvisor on, carefull not to scratch the camera, pull sides out to help.

6 Carefully clean the dome surface with a soft lint free cloth.

7 Check IR LEDs are working by covering the photocell of camera with your thumb, the IR LEDs will give a faint red glow.

(Don't look at IR LEDs for long periods of time, as you could damage your eyes)

Identification

Mechanical Drawing

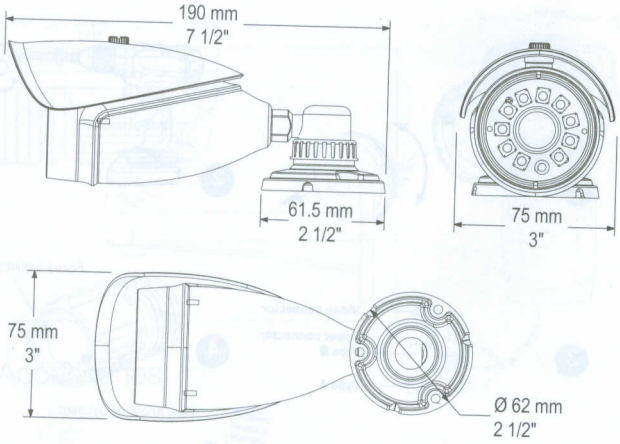

Accessories

(A) Wall Plugs
S8 x 30mm 4pcs

(B) Fitting Screws
PA4 x 35mm 4pcs

(C) Sunshield Screw
M3 x5mm

NOTE: Make sure you don't have any missing parts before you make the installation. Incorrect installation could void the warranty if instructions are not followed correctly. Please call technical for assistance if you are unsure about any procedures.

Installation

Installation information (General overview)

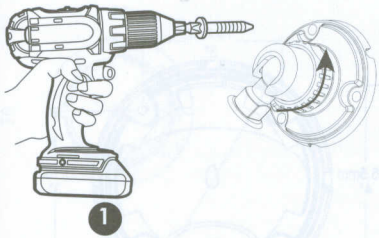

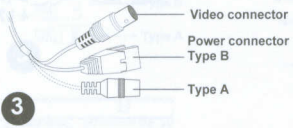

This bullet camera requires only a few simple steps for installation:

1 With hand you loosen the base, this will allow freedom to drill base into place.
Note: Base does not need to be removed from camera , illustration shown is for clarity of detail.

2 Position camera to suite make sure it is tight. Check you can't move camera.
Note: Over a long period of time temperature and conditions may effect the grip, this may drift cameras position

3 Attach power and video. Alternative power connector uses middle pin as +

4 If you had not already done so, attach sunvisor with screw, adjust to suite.
Note: Sunshield has a small variation of position, depending on angle the sunsheld may not block out the sun.

5 Check IR LEDs working by just covering the photocel of camera with your thumb, the IR LEDs will give a faint red glow.
(Don't look at IR LEDs for long periods of time, as you could damage your eyes)

Identification

Mechanical Drawing

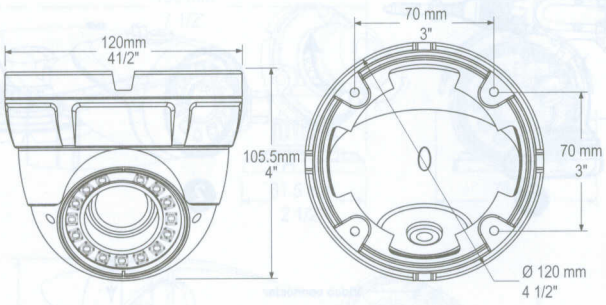

Accessories

(A) Wall Plugs
S8 x 30mm 4pc

(B) Fitting Screws
PA4 x 35mm 4pc

(C) Adjustment Tool
Vari-Focal Model

NOTE: Make sure you don't have any missing parts before you make the installation. Incorrect installation could void the warranty if instructions are not followed correctly. Please call technical for assistance if you are unsure about any procedures.

Installation

Installation information (General overview)

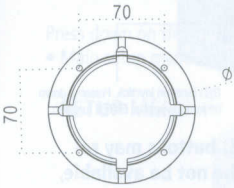

1

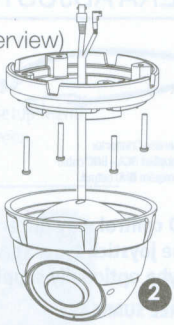

2

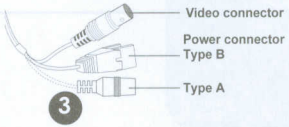

3

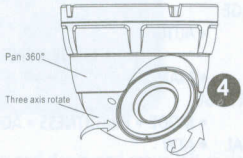

4

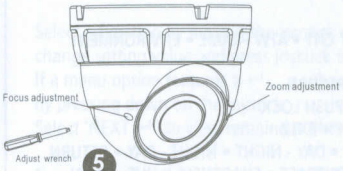

5

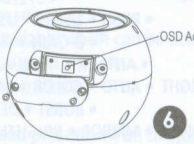

6

1 Remove dome dome and use as drill template. Attach using plugs (A) and screws (B)

2 Once base is firmly drilled into place, re-assemble parts.

3 Attach power and video. Connector types can be either A or B types.

4 Position camera to suite make tight using the ring, only requires hand.

5 Adjust the zoom & focus using the tool (C) provided (Vari-Focal models)

6 Adjust camera settings via the hidden OSD access point. Remove screws to access.

7 Check IR LEDs working by just covering the photocel of camera with your thumb, the IR LEDs will give a faint red glow.

(Don't look at IR LEDs for long periods of time, as you could damage your eyes)

CAMERA ADJUSTMENT

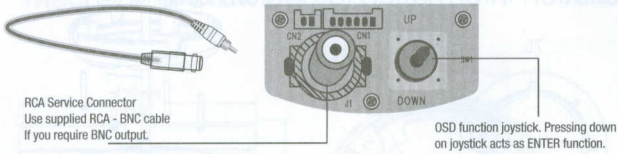

The OSD control may differ from show above, OSD buttons may replace the joystick type. Service cable output maybe not be available, and maybe optionally supplied with the product.

MENU TREE SUMMARY

LANGUAGE
LENS • AUTO
• MODE • SPEED
• MANUAL
SHUTTER / AGC
• MODE • BRIGHTNESS • AGC
WHITE BAL • ATW
• SPEED • DELAY CNT • ATW FRAME • ENVIRONMENT
• PUSH • USER1 • USER2
• B-GAIN • R-GAIN • RETURN
• ANTI CR • MANUAL ATW • PUSH LOCK
DAY / NIGHT • AUTO • COLOR • B/W • EXT1 • EXT2
• BURST • DELAY CNT • DAY - NIGHT • NIGHT - DAY • RETURN
PICT ADJUST • MIRROR • BRIGHTNESS • CONTRAST • SHARPNESS • HUE • GAIN
NR • NR MODE • Y LEVEL • C LEVEL
MENU1 • BACKLIGHT
• D-WDR
PRIVACY • AREA SEL • TOP • BOTTOM • LEFT • RIGHT • COLUR • TRANS • MOSAIC
MOTION DET • MOTION DET • DETECT SENSE • BLOCK DISP • MOTION AREA • RETURN
CAMERA ID
SYNC • PHASE
CAMERA RESET
EXIT • SAVE ALL

NOTE: Day / Night should be set to EXT1 on models supporting IR LEDs

OSD MENU control

Press down on the function joystick to access the setup menu.

- Main setup menu is displayed on the monitor screen.

SETUP MENU

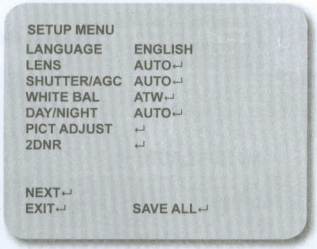

Select a function by moving the joystick up and down and move left or right to change setting value and press joystick to confirm selection.
If a menu option features a ↵ , a sub menu is available which can be accessed by pressing down on the joystick.
Select 'NEXT ↵' to view remainder of the OSD setup menu

Once finished updating settings, highlight 'EXIT' and press down on the joystick to exit setup menu.
To retain the changed settings after a power on/off of the camera you need to select **SAVE ALL** option on the menu.

LANGUAGE

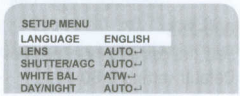

Select the language in which to display the OSD menu.
Note: Selection changes the language displayed immediately.

LANGUAGE: **English,Japanese,German, French Russian, Portuguese, Spanish, Chinese.**

LENS

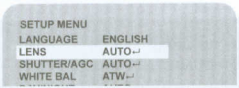

Changes the settings of the internal lens..

LENS: MANUAL,AUTO↵

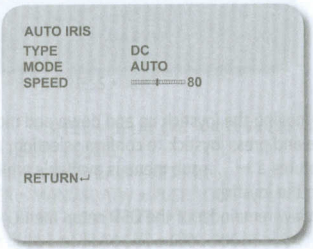

TYPE: DC

MODE: **AUTO,CLOSE,OPEN**
-AUTO: The mechanical iris is controlled automatically
-CLOSE: The mechanical iris is set to the closed position
-OPEN: The mechanical iris is set to the open position
Default setting is **Auto**

SPEED: **000-255**
Sets the convergence speed of the mechanical iris.
Default setting is **80**

SHUTTER/AGC

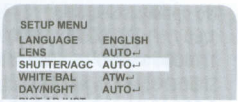

Shutter has two options either AUTO or MANUAL

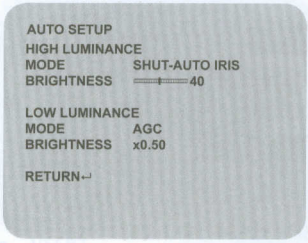

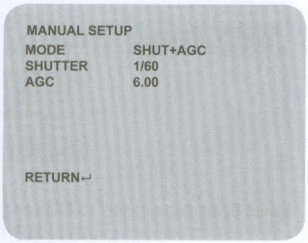

- **AUTO SETUP HIGH LUMINANCE**

MODE: SHUT

BRIGHTNESS: 000-255
High and medium brightness.

- **AUTO SETUP LOW LUMINANCE**

MODE: AGC / OFF
Specifies the AE control for medium and high brightness.

BRIGHTNESS: x0.25 / x0.50 / x0.75 / x1.00
Specifies low brightness reference.

- **MANUAL SETUP**

MODE: SHUT+AGC
No options selectable.

SHUTTER: 1/60 / 1/120 / 1/250 / 1/500
1/1000 / 1/2000 / 1/4000 1/10000
Shutter speed in fractions of a second.

AGC: 6.00 / 12.00 / 18.00 / 24.00 / 30.00
36.00 / 42.00 / 44.80
AGC value in [dB]

WHITE BAL

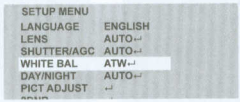

White Balance can be set to following:
ATW / PUSH / USER1 / USER2 / ANTI CR
/ MANUAL / PUSH LOCK

- **ATW**

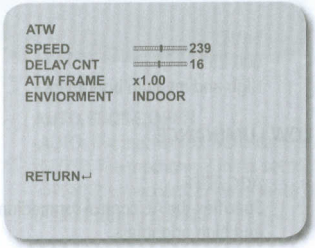

SPEED: 000-255 Specifies the AE control for ATW
Default setting is **239**

DELAY CNT: 000-255 Sets the time based of ATW
change. Default setting is **16**

CAMERA ADJUSTMENT

ATW FRAME: **x0.50 / x1.00 / x1.50 / x2.00**
Sets pull in frame for magnification
Default setting is **X1.00**

ENVIRONMENT: INDOOR / OUTDOOR
Set the pull in frame of ATW
Default setting is **OUTDOOR**

- **PUSH** Use white balance regardless of the subject conditions.
- **USER1** User defined gain adjustment on B and R

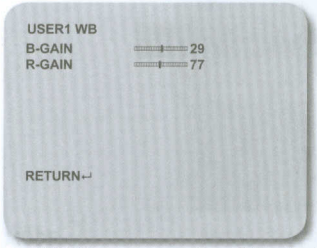

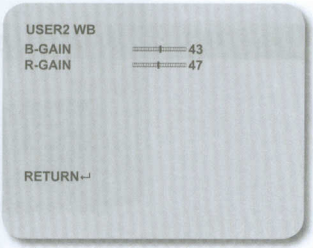

- **USER2** User defined gain adjustment on B and R

B-GAIN: 000-255 B Gain adjustment for WB
R-GAIN: 000-255 R Gain adjustment for WB

- **ANTI CR** Activates color rolling suppression.
- **MANUAL ATW**

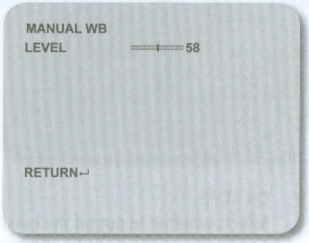

LEVEL: 000-255
Specifies the R and B gain values for manual WB.
The actual variable range is limited to the range from the low color temperature (approx. 1800K) to the high color temperature (approx. 10500K).
Default setting is **58**

- **PUSH LOCK** Press down on joystick to set current scene as the white balance level. Use a grey card in front of lens to give a natural white level.

DAY/NIGHT **AUTO / COLOR / B/W↵/EXT1 /EXT2**

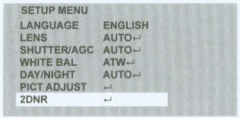

Day night mode, can be set to COLOR or AUTO. Auto allows fine settings of the transition time from day-night, and vice versa. COLOR setting retails color only.

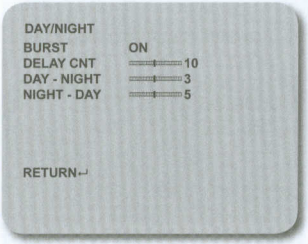

BURST: ON / OFF
Selects whether to output the burst signal when night mode has been identified.

DELAY CNT: 000-255
Night/Day identification transfer time.

DAY - NIGHT: 000-255
Threshold for Night status from day status.

NIGHT - DAY: 000-255
Threshold for the Day status from night status.

B/W SETUP: Allows additional Smart IR settings to be enabled.

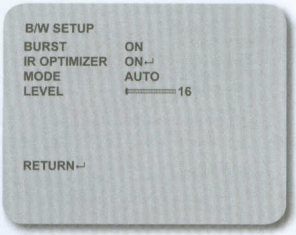

MODE: AUTO / CENTER

With Mode for Smart IR Set allow user to position the Front Light Compensation feature of the camera to center position of image. or to automatic area.

This feature operates also when day/night mode is set to Auto, but you have to enable from the B/W setup to Enable the SMART IR option.

EXT1: This is the setting that's used for IR LED models
The EXT1 is used to sync IR LED operation with the going into B/W mode.

PICT ADJUST

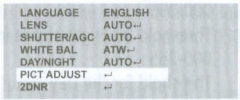

Picture and display control settings

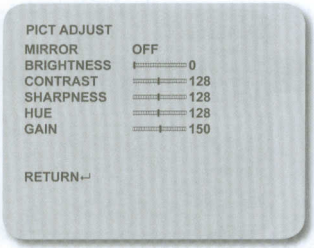

- **MIRROR:** **ON / OFF** Horizontally flip the display output.
- **BRIGHTNESS:** **000-255** Screen brightness.
- **CONTRAST:** **000-255** Screen contrast.
- **SHARPNESS:** **000-255** Screen sharpness.
- **HUE:** **000-255** Adjust the hue.
- **GAIN:** **000-255** Adjust the gain.

2DNR

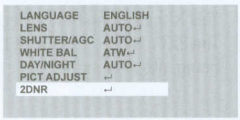

Digital Noise Reduction.
This function reduces the background noise in a low luminance environment.

NR MODE: "Y/C" / "OFF" / "Y" / "C"
Noise reduction Filter mode.

CAMERA ADJUSTMENT

Y LEVEL: 000-015
Adjustment of the Y filter strength.
Default setting is **4**

C LEVEL: 000-015
Adjustment of the C filter strength.
Default setting is **4**

NEXT

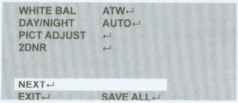

From the main setup menu select NEXT ↵ to enter addition setup menus.

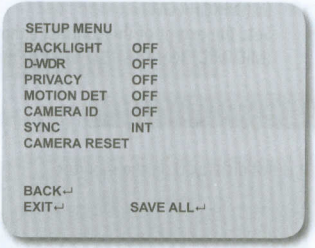

BACKLIGHT OFF / BLC / HLC

-**OFF** Backlight compensation OFF
-**BLC** Backlight compensation ON
-**HLC** High light compensation ON

SHADOW REDUCTION (D-WDR)

OFF / ON↵

CAMERA ADJUSTMENT

This function compensates for darker areas surrounding the object to provide naturally sharp picture and improves contrast in bright/dark areas.

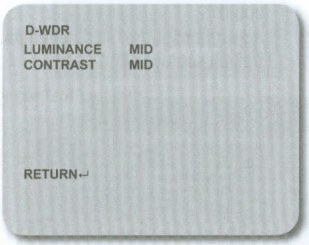

•LUMINANCE Sets the extent of the luminance compression (MID/HIGH/LOW)

•CONTRAST Sets the extent of the contrast enhancement (MID/MIDHIGH/HIGH/LOW/MIDLOW)

PRIVACY OFF / ON↵

Hide an area so that it is not displayed on the monitor.

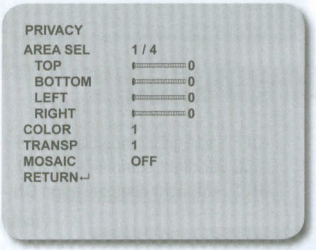

AREA SEL: Selects the mask frame to be adjusted.

TOP: Sets the top side of the mask frame selected by the AREA SEL parameter

BOTTOM: Sets the bottom side of the mask frame selected by the AREA SEL parameter.

LEFT: Sets the left side of the mask frame selected by the AREA SEL parameter.

RIGHT: Sets the right side of the mask frame selected by the AREA SEL parameter

COLOR: Sets the colors of the mask frames
TRANSP: Sets the transparency ratio of the mask frames.
MOSAIC: Sets the mask frame mosaic to ON or OFF

MOTION DET OFF / ON↵

Motion Detection is defined by rectangular areas. This give a visual identification of motion areas.

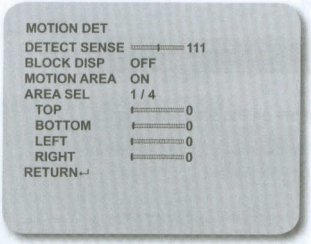

DETECT SENSE: Sets the motion detection sensitivity
BLOCK DISP: ON/OFF/ENABLE status of the motion detection block display.

ON: Make motion areas visible, OFF: Hide motion areas
ENABLE↵ Press enter to access the "dead band setting" screen, on-screen cursor moves in response to the inputs Left, Right, Up and Down to set the sensing area, or dead band for specified blocks. This allows you to specify and set an area of motion which is not rectangular in shape.
Press and hold SET button 3 seconds to exit.

MOTION AREA: ON / OFF Enable / Disable Area No.

AREA SEL: 1/4 / 2/4 / 3/4 / 4/4. Selects motion area number.

TOP: Set the top side of the monitoring frame selected by the AREA SEL parameter.

BOTTOM: Set the bottom side of the monitoring frame selected by the AREA SEL parameter

LEFT: Set the left side of the monitoring frame selected by the AREA SEL parameter.

RIGHT: Sets the right side of the monitoring frame selected by the AREA SEL parameter

CAMERA ID OFF / ON↵

Camera ID shows a name on the screen as chosen.

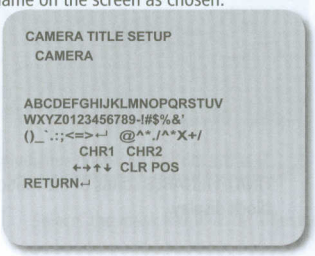

CAMERA ADJUSTMENT

Use Up/Down/Left/Right to move around. CHR1/2 changes the selection fonts to alternative selection, CLR will clear info. POS allows position change.

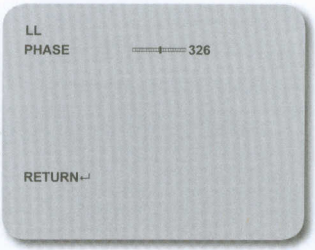

SYNC INT / LL ↵

Video synchronization displayed
INT(Internal) or LL (Line Lock)
Note: Shows **INT** with DC only model.
And **LL** setting for camera model
when connected to a AC supply.

PHASE: 000-524
Adjust the phase in the vertical direction when the line lock mode is available.

CAMERA RESET ↵

This will reset all settings for all menus to manufacturer defaults. This allow you to return to shipped settings from the manufacturer.

EXIT / SAVE ALL

- **EXIT** Exit OSD menu.
- **SAVE ALL** Saves the settings to camera

Refer to the following table if you are experiencing trouble with your camera.

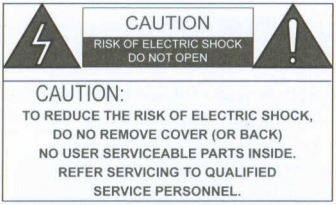

The lightning with an arrowhead symbol, within an equilateral triangle is intended to alert the users to the presence of uninsulated "dangerous voltage" within the product's enclosure that may be sufficient magnitude to constitute a risk of electric shock to persons.

The exclamation point with an equilateral triangle is intended to alert the user to the presence of important operating and maintenance (servicing) instructions in the literature accompanying the appliance.

This equipment has been tested and found to comply with limits for a Class A digital device, pursuant to part 15 of the FCC Rules. These limits are designed to provide reasonable protection against harmful interference when the equipment is operated in a commercial environment. This equipment generates, uses, and can radiate radio frequency energy, if not installed and used in accordance with the instruction manual, may cause harmful interference to radio communications.

Operation of this equipment in a residential area is likely to cause harmful interference in which case the user will be required to correct the interference at his own expense.

Changes or modifications not expressly approved by the manufacturer could void the user's authority to operate the equipment.

To prevent electric shock and risk of fire hazards:

- Do NOT use power sources other than that specified.

This installation should be made by a qualified service person and should conform to all local codes.